# Ultrasonic Flow Meter User Manual


# Contents


1. Introduction....4
    1.1 Preface....4
    1.2 Features....4
    1.3 Flow measurement principle....4
    1.4 Optional transducer....5
    1.5 Typical application....5
    1.6 Product Identification....5
    1.7 Specifications....6
    1.8 wiring diagram....7
2. On Board Segmental LCD display Details....7
    2.1 On-Board display table....8
    2.2 On Board Display Error code....10
3. Menu Window Details....11
4. Begin to mount and measure....21
    4.1 Steps to Configure the Parameters....21
    4.2 Transducers Mounting Allocation....22
    4.3 Transducers Installation....24
        4.3.1 Wiring diagram of transducer....24
        4.3.2 Transducers Spacing....24
        4.3.3 V-method Installation....25
        4.3.4 Z-method Installation....25
        4.3.5 W-method Installation....26
        4.3.6 N-method Installation....26
    4.4 Installation Checkup....26
        4.4.1 Signal Strength....27
        4.4.2 Signal quality....27
        4.4.3 Time Ratio between the Measured Total Transit Time and the Calculated Time....27
5. Communication Protocols....28
    5.1 The MODBUS protocol....28
        5.1.1 MODBUS REGISTERS TABLE....29
        5.1.2 REGISTER TABLE for the DATE accumulators....35
        5.1.3 REGISTER for power-on and power-off....36
    5.2 The FUJI extended communication protocol....38
        5.2.1Command prefixes and the command connector....40
    5.3 The compatible communication protocols....42
    5.4 Key Value Table....44
6. How To....44
    6.1 How to judge if the instrument works properly....44
    6.2 How to judge the liquid flowing direction....45
    6.3 How to change between units systems....45
    6.4 How to select a required flow rate unit....45

6.5 How to use the totalizer multiplier....45
6.6 How to open or shut the totalizers....46
6.7 How to reset the totalizers....46
6.8 How to restore the flow meter with default setups....46
6.9 How to use the damper....46
6.10 How to use the zero-cutoff function....47
6.11 How to setup a zero point....47
6.12 How to get a scale factor for calibration....47
6.13 How to use the system locker....47
6.14 How to use 4-20mA current loop output....48
6.15 How to use the Frequency Output....48
6.16 How to use the Totalizer Pulse Output....49
6.17 How to produce an alarm signal....49
6.18 How to use the built-in Buzzer....50
6.19 How to use the OCT output....50
6.20 How to modify the built-in calendar....50
6.21 How to view the Date Totalizers....51
6.22 How to use the Working Timer....51
6.23 How to use the manual totalizer....51
6.24 How to know how long the battery will last....51
6.25 How to check the ESN and other minor details....51
6.26 How to use the data logger for scheduled output....52
6.27 How to output analogue voltage signal....52
6.28 How to adjust the LCD display....52
6.29 How to use RS232/RS485?....52
6.30 How to use automatic amending function for offline compensation....52
6.31 How to use batch controller....53
6.32 How to adjust the analogue output....53
6.33 How to solidify the parameters....53
6.34 How to enter the parameters of user-type-transducer....53
6.35 How to use the circular display function....54
6.36 How to enter into the linearity correcting? How to enter into the data?....54
6.37 How to save / restore frequently-used pipe parameters....55
7. Troubleshooting....55
7.1 Power-on Error Displays and Counter-Measures....55
7.2 Error Code and Counter-Measures....56
7.3 Other Problems and Solutions....57

# 1. Introduction

## 1.1 Preface

Welcome to use new generation transit-time ultrasonic flow meter, please read the user manual carefully before using.

## 1.2 Features

- Linearity: 0.5%, Repeatability: 0.2%, Accuracy: ±1%
- Easy to operate.
- Several type transducers for selection, measuring pipe size is from DN15mm to DN6000mm
- Adopt low voltage, multi-pulse technology to improve accuracy, useful life and reliability.
- Powerful Recording Function, record the totalizer data of the last 64 days/64 monthes/5 years.

## 1.3 Flow measurement principle

The CAM-3000F ultrasonic flow meter is designed to measure the fluid velocity of liquid within a closed conduit. The transducers are a non-contacting, clamp-on type, which will provide benefits of non-fouling operation and easy installation.

The CAM-3000F transit-time flow meter utilizes two transducers that function as both ultrasonic transmitters and receivers. The transducers are clamped on the outside of a closed pipe at a specific distance from each other. The transducers can be mounted in V-method where the sound transverses the pipe twice, or W-method where the sound transverses the pipe four times, or in Z-method where the transducers are mounted on opposite sides of the pipe and the sound crosses the pipe once. This selection of the mounting method depends on pipe and liquid characteristics. The flow meter operates by alternately transmitting and receiving a frequency modulated burst of sound energy between the two transducers and measuring the transit time that it takes for sound to travel between the two transducers. The difference in the transit time measured is directly and exactly related to the velocity of the liquid in the pipe, show as follows:

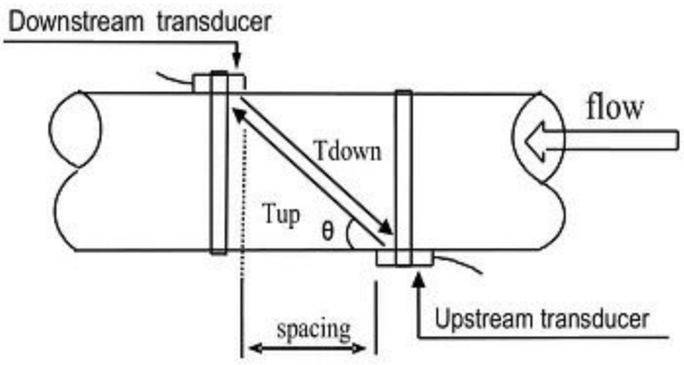

$$V = \frac{MD}{\sin 2\theta} \times \frac{\Delta T}{T_{up} \bullet T_{down}}$$

θ is the include angle to the flow direction
M is the travel times of the ultrasonic beam
D is the pipe diameter
Tup is the time for the beam from upstream transducer to the downstream one
Tdown is the time for the beam from downstream transducer to the upstream one
ΔT=Tup –Tdown

## 1.4 Optional transducer

- **TS-1** clamp-on type transducer, pipe size from DN15-100mm
- **TM-1** clamp-on type transducer, pipe size from DN50-700mm
- **TL-1** clamp-on type transducer, pipe size from DN300-6000mm
- **HTS-1** clamp-on type transducer, pipe size from DN15-100mm
- **HTM-1** clamp-on type transducer, pipe size from DN50-1000mm

## 1.5 Typical application

The flow meter can be applied to a wide range of pipe flow measurements. Applicable liquids include pure liquids as well as liquid with small quantity of tiny particles.
Examples are:
★ Water (hot water, chilled water, city water, sea water, waste water, etc.);
★ Sewage with small particle content;
★ Oil (crude oil, lubricating oil, diesel oil, fuel oil, etc.);
★ Chemicals (alcohol, acids, etc.);
★ Plant effluent;
★ Beverage, liquid food;
★ Ultra-pure liquids;
★ Solvents and other liquids

## 1.6 Product Identification

Each set of the flow meter has a unique product identification number or ESN (electronic serial number) written into the software that can only be modified with a special tool by the manufacturer. In

case of any hardware failure, please provide this number which is located on menu window **M61** when contacting the manufacturer.

## 1.7 Specifications

| Items | | Specifications |
|---|---|---|
| Main unit | Accuracy | Better than ±1% |
| | Repeatability | Better than 0.2% |
| | Principle | Transit-time measuring principle |
| | Measurement Period | 500ms |
| | Display | LCD with backlight, display accumulated flow/heat, instantaneous flow/heat, velocity, time etc. |
| | Output | Analogue output: 4-20mA or 0-20mA current output. Impedance 0~1kΩ. Accuracy 0.1%. |
| | | OCT output: Frequency signal (1~9999HZ) |
| | | Relay output: over 20 source signal (no signal, reverse flow etc.) |
| | | RS485 serial port |
| | Input | Three analogue input |
| | | Three-wire PT100 resistor input (optional) |
| | Other functions | Automatically record the totalizer data of the last 64 days / 64 months / 5 years;<br>The power-on time and corresponding flow rate of the last 64 power on and off events. Allow manual or automatic flow loss compensation<br>The instrument working status of the last 64 days |
| pipe | material | Steel, stainless steel, cast iron, cement pipe, copper, PVC, aluminum FRP etc. Liner is allowed |
| | Size | 15-6000mm |
| | Straight pipe section | In the upstream it must be beyond 10D, in the downstream it must be beyond 5D, in the upstream the length must be beyond 30D from the access of the pump. (D stands for pipe diameter) |
| Liquid | Types | Water, sea water, industrial sewage, acid & alkali liquid, alcohol, beer all kinds of oils which can transmit ultrasonic single uniform liquid |
| | Temperature | Standard: -30˚C - 90˚C ， High-temperature：-30˚C - 160˚C |
| | Turbidity | Less than 10000ppm, with a little bubble |
| | Flow Direction | Bi-directional measuring, net flow/heat measuring |
| Environment | Temperature | Main Unit: -30˚C - 80˚C |
| | | Transducer: -40℃ -110℃, Temperature transducer: select on enquiry |
| | Humidity | Main Unit: 85% RH |
| | | Transducer: water-immersible, water depth less than 3m |
| Cable | Twisted Pair Line, standard length of 20m, can be extended to 500m (not recommended); Contact the manufacturer for longer cable requirement.<br>RS-485 interface, transmission distance up to 1000m | |
| Power Supply | DC24V | |
| Power Consumption | Less than 1.5W | |
| Protocols | MODBUS, M-BUS, Fuji extended protocol and other factory protocol | |