OMNI-TUF-200R

Transit time ultrasonic water meter

Features

Piping :	**25mm-6000mm**
Protection class transmitter:	**IP65**
Protection class transducer:	**IP68**
Display:	**96 segment LCD display backlighted**
Keypad:	**Magnetic operation stick**
Displayed data:	**istantaneous flowrate, flow totalizer**
Housing:	**Aluminium**
Mounting:	**wall**
Output::	**4 - 20m A or 0 - 20mA**
Total accuracy:	**± 2%**
Repeatibility:	**±0,2 - 0,5%**
Linearity:	**±0,5%**
Basic measurement period:	**500ms**
Serial port:	**RS485**
Communication protocol:	**MODBUS RTU or ASCII**
Programmable frequency output:	**12- 9999HZ**
Relay output:	**for pulse totalizer or alarm**
Medium speed:	**±32m/s**
Working temperature:	**-30 - 80°C**
Instrument humidity:	**non condensing 85% RH (40°C)**
Sensor process temperature:	**S1/M1/L1 0-70°C** **S2/M2/L2 0 -160°C**
Sensor humidity:	**non condensing 98% RH (40°C)**
Power supply:	**3.6 V/19AH lithium battery(6years)**
Dimensions:	**head 96x96x91mm**
Weight:	**2.4Kg**

General

The OMNI-TUF-200R is composed by a digital converter and two clamp-on or insertion type ultrasonic It is designed to measure the fluid velocity of a liquid inside a closed conduit. The transducers are a non-contacting, clamp-on type, which provide benefits of non-fouling operation and easy installation. The DSP digital technology (Digital Signal Processing) ensure a low sensibility of the instrument against potential transient factors.

0. Working principle

The OMNI-TUF-200R utilizes two transducers which work as ultrasonic transmitters and receivers.
They are clamped on the outside of a closed pipe at a specific distance from each other. They can be mounted in V position (the sound crosses the pipe twice), in W position (the sound crosses the pipe 4 times) or in Z position (mounted on opposite sides of the pipe - the sound crosses the pipe once). The selection of the mounting position depends on pipe and on liquid characteristics.
The Flow meter operates by alternately transmitting and receiving a frequency modulated burst of sound energy between the two transducers and measuring the transit time that takes the sound to travel between them. The difference in measured transit time is directly and exactly related to the velocity of the liquid inside the pipe (fig.1).

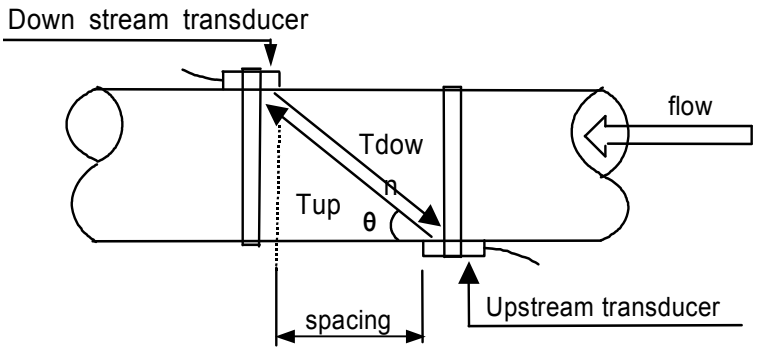

Fig. 1

$$V = \frac{MD}{\sin 2\theta} \times \frac{\Delta T}{T_{up} \bullet T_{down}}$$

Where:

θ =	include angle for the flow direction
M =	transit time of the ultrasonic signal
D=	Internal pipe diameter
Tp=	Transit time in the forward direction
Tdown=	Transit time in the reverse direction
ΔT=	Tup-Tdown

1 Features

1.1 Mechanical dimensions

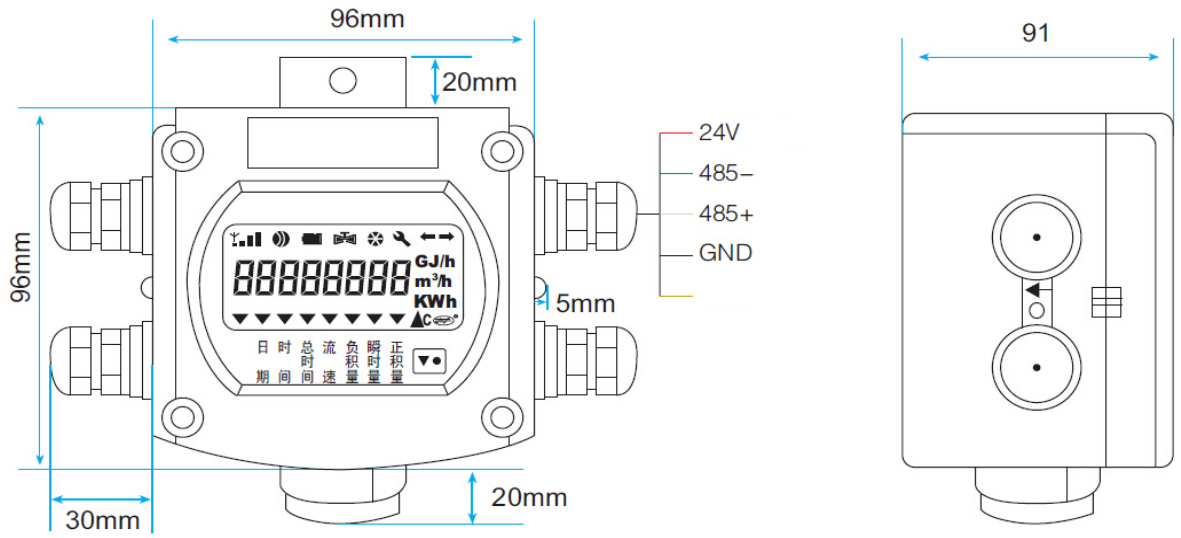

1.2 Applications

1. water, sewage with low particle content and seawater
2. water supply and drainage water
3. power plants, nuclear power plant, thermal and hydropower plants, heat energy, boiler feed water and energy management system
4. metallurgy and mining application
5. petroleum and chemicals
6. food, beverage and pharmaceutical
7. pulp and paper
8. pipeline leak detection
9. network monitoring system, energy and flow computer management

1.3 Product Identification

Every instrument has an 8 digit identification number (ESN) which provides the information of version and manufacring date. It is displayed on menu M61 and can be employed for instrumentation management.

■Mainboard wiring

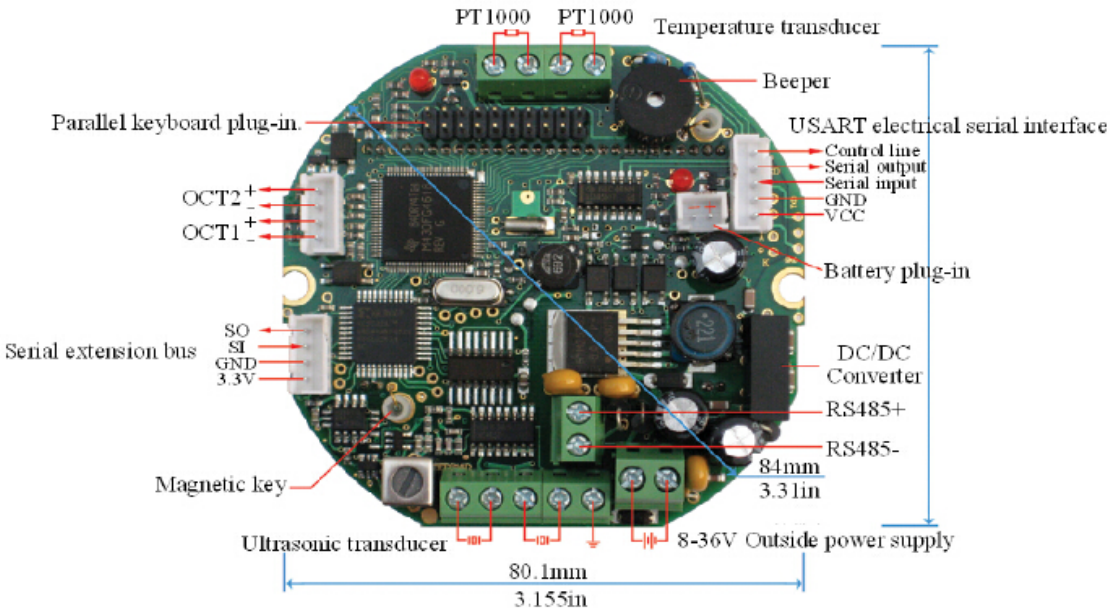

little diameter water meter mechanism size.

3 Installation

3.1 Measuring location

The first step of the installation process is the selection of an optimum place in order to obtain a more accurate measurement. For this reason it is important to have a basic knowledge of the piping and of its plumbimg system. An optimum place would be defined as a straight pipe length full of liquid, horizontally or vertically positioned.
Selection principles for an optimum installation:

(1) Install the transducers on the longer length of the pipe and make sure that the pipe is completely full of liquid.
(2) Make sure that the temperature on the location does not exceed the temperature range of the transducers. In general the closer to the room temperature the better.
(3) Take the pipe fouling into consideration. Select a straight length of a relatively newer pipe. If the condition is not satisfying, consider the fouling thickness as part of the liner for a better result.
(4) Remember that gas fase in the liquids is in the upper part of the pipe. Consequently on horizontal pipe installations avoid to put the trasducers in the upper part.

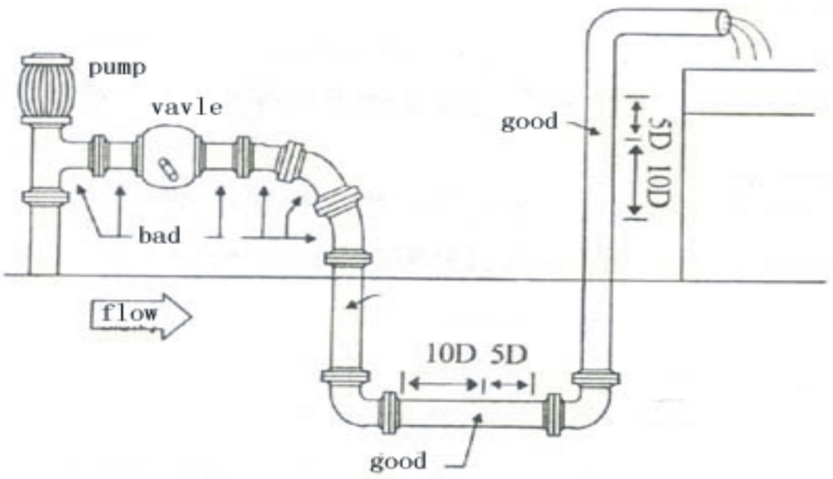

3.2. Transducers installation

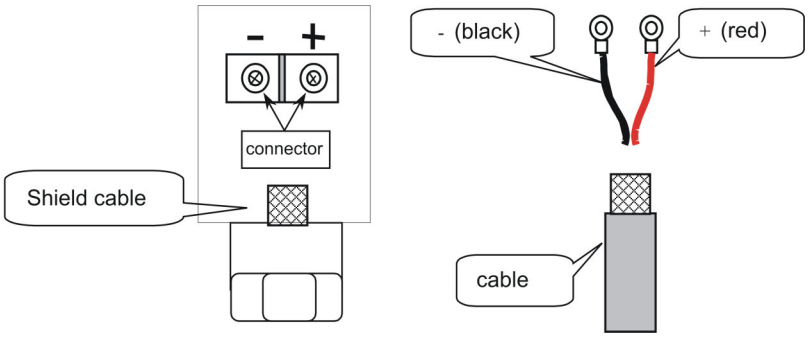

The transducers are made of piezoelectric crystals, both for transmitting and receiving the ultrasonic signals through the wall of the liquid piping system. The measurement is realized by measuring the traveling time difference of the ultrasonic signals. Since the difference is very small, the spacing and the alignment of the transducers are important factors for the accuracy of the measurement and the performance of the measuring system.

How to proceed with the installation:
(1) Locate an optimum position on the pipe, which has to be in good condition (no rust)
(2) Clean and dust the pipe surface.
(3) Apply adeguate coupler on the spot where the transducers have to be installed and leave no gap between the pipe surface and the transducers.

To avoid gas bubbles (gas fase) inside the upper part of the pipe, the transducers should be installed horizontally by the side of the pipe.

3.2.1 Transducers spacing

The spacing value shown in menu M25 refers to inner distance between the two transducers. The actual trasducers spacing should be as close as possible to the spacing value. (see figures on next page).

3.2.2 V method installation

It is the most common used method for pipe with diameters ranging from 20 to 300 millimeters.

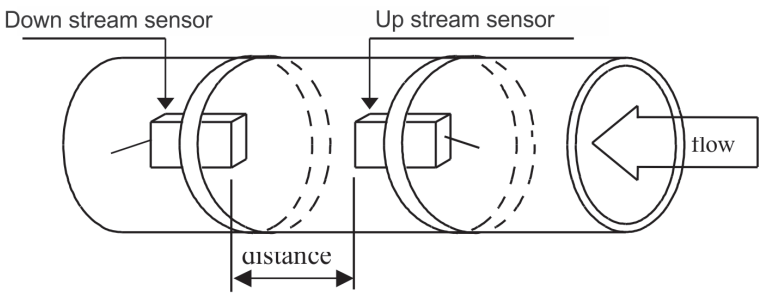

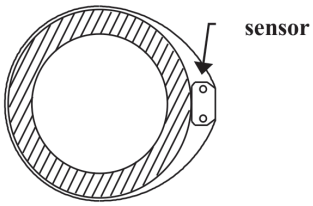

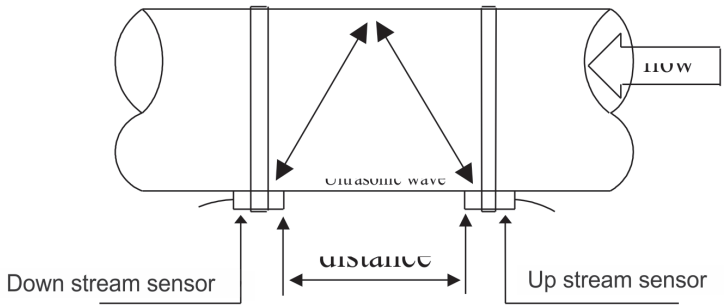

3.2.3 Z method installation

It is commonly used when the pipe diameter is between 300 and 500 millimeters.

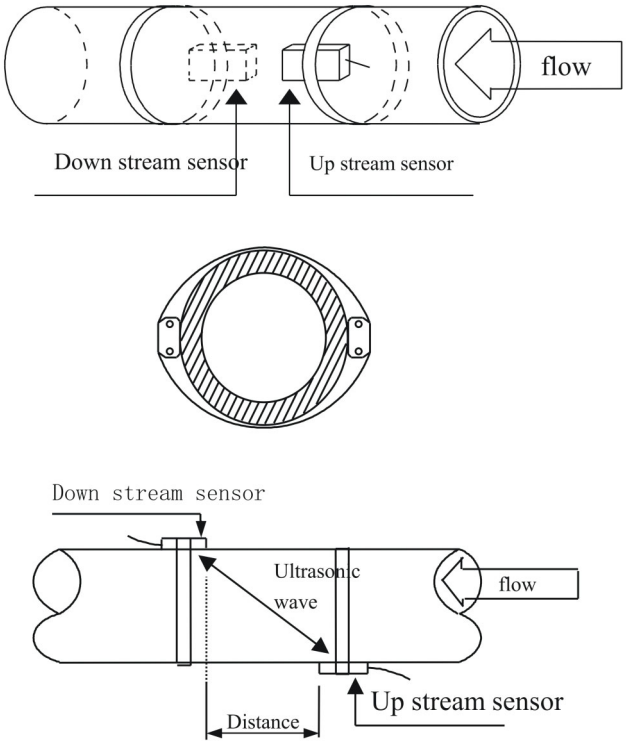

3.2.4 W method installation

It is usually used on little pipes with a diameter from 10 to 100 millimiters.

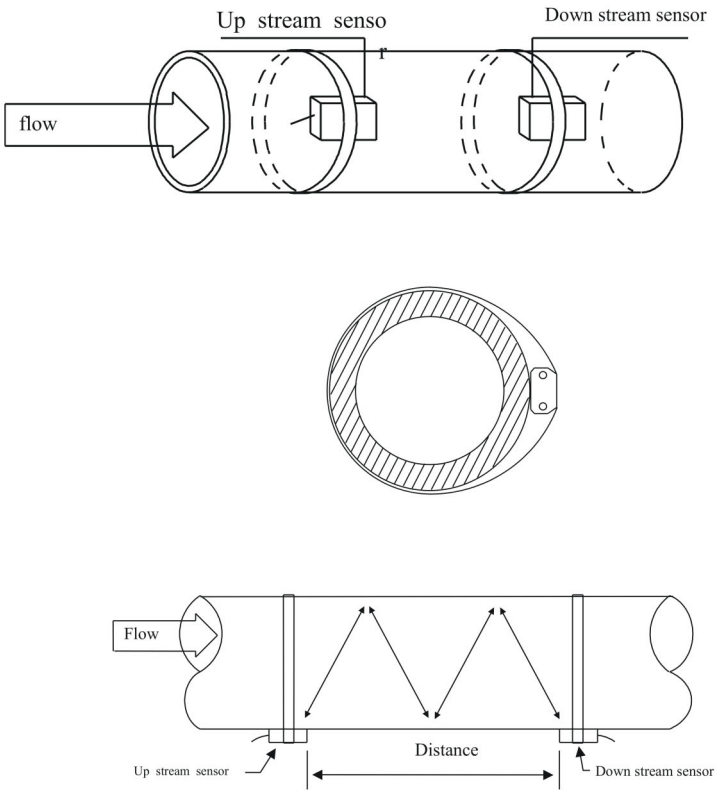

3.2.6 Insert sensor installation

Steps for a correct installation:

1- If the pipe is placed inside the wall, check that there's sufficient space for the mounting of the insertion sensor (min. distance between the wall and the pipe = 540mm)

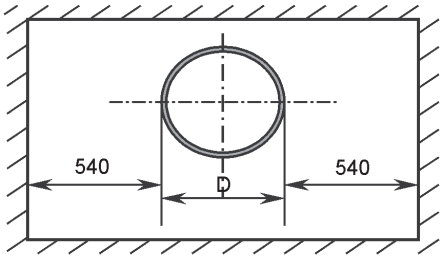

Pipe length : L> (D+100) mm

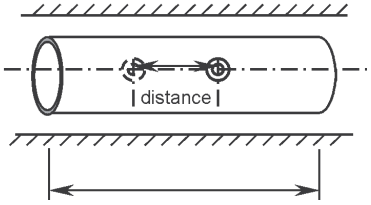

2- Procure a drilling tool
3- Enter pipe parameter (in menu M23 choose option 5. "insertion B sensor" - in menu M24 choose 1. "Z method" - in menu M25 input installation distance)
4- Choose the right position and calculate the distance
5- Install the ball valve

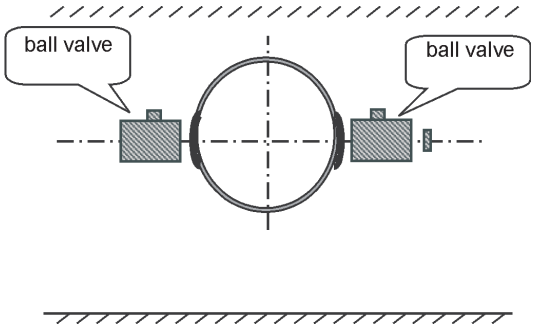

6- Drill the pipe

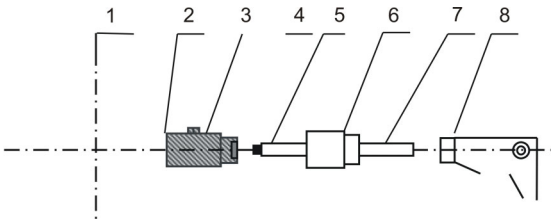

1 sensor 2 bottom of ball valve 3 ball valve 4 screw
5 tight screw 6 connection 7 cable

7- Insert the sensor

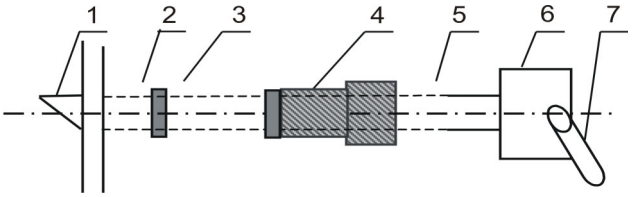

1 sensor 2 bottom of ball valve 3 ball valve 4 screw
5 tight screw 6 connection 7 cable

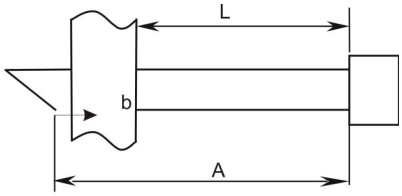

L= A - b

A = sensor length b = pipe thickness L= external sensor length

8- Proceed with the electrical connection

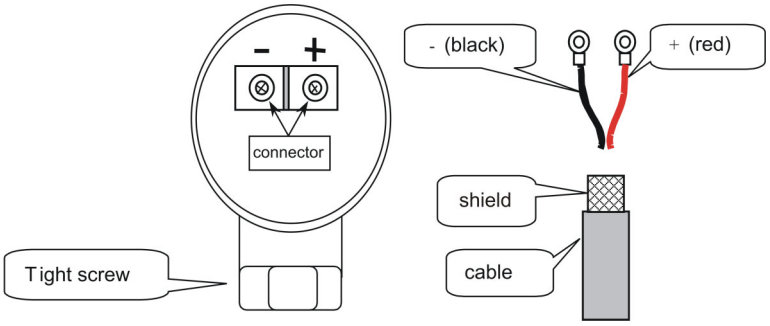

5 Menu structure

5.1 Menu window details

WARNING!!!! On the menu window from M00 to M09 the display will not show the menu number on the top left corner!

Using magnetic stick click display's top left corner(shift up key) enter H0,H1,H2 window.

- * 88888888 Display the numerical value
- * Signal strength
- * Signal quality(Q value)
- * Flow is not null point
- * Error need to repair
- * Fluid direction
- * Flow in null point or unreach sensitive
- * m³/h Instantaneous flow(m³/h)
- * GJ/h Instantaneous heat (GJ/h)
- * KWh Accumulate heat(KWh)
- * ΔC Supply and return water difference

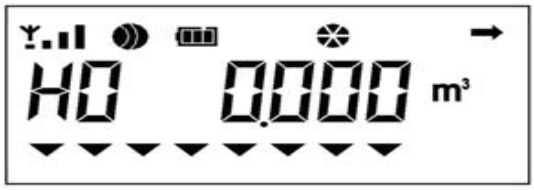

Enter Window H0 to start manual totalizer, accumulate flow count starting, it will stop when user leave this window.

Enter window H1 stop to accumulate, and display accumulate flow, unit is displayed

Window H2 display manual accumulated time, unit is second.

RS485 connect to computer input interface directly to process data collect calibration or insert secondary instruments or software which provided by us and could be able to set the parameters.

Press ENTER to start **Repress ENTER to stop count**

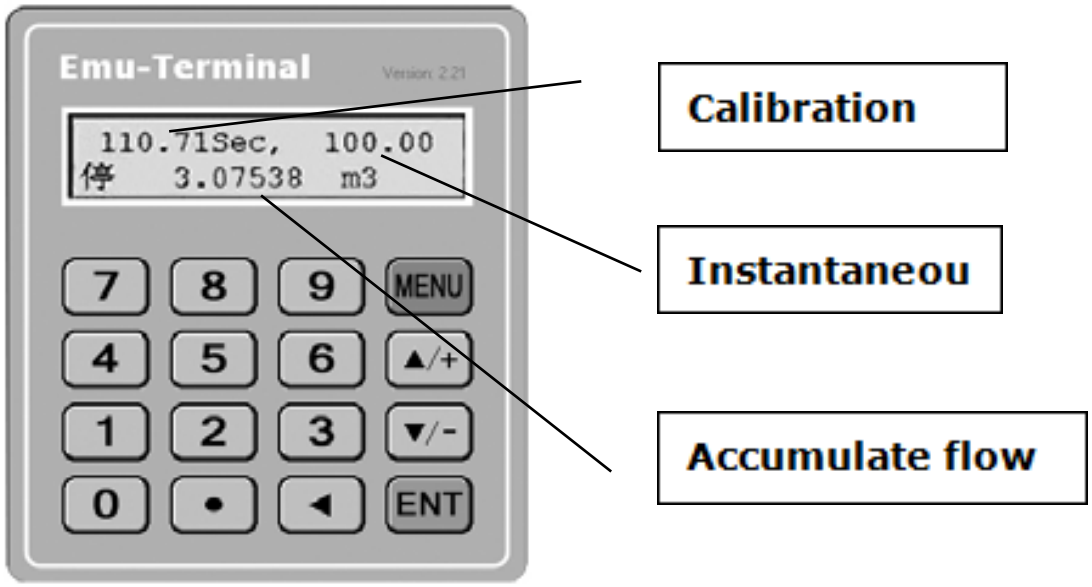

Teren-UFM-100F - Warranty

Products supplied by OMNI industry are guaranteed for a period of 12 (twelve) months from delivery date according to the conditions specified in our sale conditions document. Omni industry can choose to repair or replace the Product. If the Product is repaired it will mantain the original term of guarantee, whereas if the Product is replaced it will have 12 (twelve) months of guarantee. The warranty will be null if the Client modifies, repairs or uses the Products for other purposes than the normal conditions foreseen by instructions or Contract. In no circumstances shall OMNI industry be liable for direct, indirect or consequiential or other loss or damage whether caused by negligence on the part of the company or its employees or otherwise howsoever arising out of defective goods.

OMNI-TUF-200R - Factory Test Certificate

In conformity to the company and ceck procedure I certify that the equipment:

OMNI-TUF-200R..... part nb. .....

is conform to the technical requirements on Technical Data and it is made in conformity to the OMNI instruments procedure

Quality Control Manager: .....

Production and check date: .....

tel: +44 (0) 845 9000 601 **fax:** +44 (0) 845 9000 602
web: www.omniinstruments.co.uk **e-mail:** info@omni.uk.com